TM 273-40

BRUYNOOGHE
transportbanden

Product information

Drummotors

TM 273-40

Van der Graaf

Power Transmission Equipment

www.vandergraafpte.nl

The TM 273's playground

TM 273-40

A wide range of applications

Van der Graaf has achieved a prominent position on both the domestic and international market with its "GV" Drummotors. The "GV" Drummotor has found success in a wide range of applications including the following: automotive, X-ray, construction, postal, courier, mining, aggregate, airline baggage, package flow, tyre manufacturing, fish processing, poultry processing, meat processing, agriculture, fruit and vegetable, farming, forestry, baking, dairy and many more.

4 Introduction
5 Selection table
6 Selection table Dahlander motors
7 Dimensions Drummotors
8 Dimensions Taildrums
9 Dimensions bracket
10 Cable exit
11 Cross sectional / parts description
14 Options
17 Product range
18 Notes
20 Contact us

Selection table

TYPE TM 273.40	Power kW	Beltspeed m/s at 50 Hz Beltpull N										Min. L mm Design A	Min. L mm Design B	Full load curr. 400 V - 50 Hz I = ... A	Weight kg L=600
275	5,50	**5,00** *1045*	**4,40** *1190*	**3,60** *1450*	**3,20** *1635*							*500*	*550*	*11,0*	*102*
275 Z		**2,50** *2090*													
275 ZV		**2,20** *2375*	**2,00** *2615*	**1,80** *2905*	**1,70** *3075*	**1,40** *3730*	**1,30** *4020*	**1,20** *4355*							
255	4,00	**5,00** *760*	**4,40** *865*	**3,60** *1055*	**3,20** *1190*							*500*	*550*	*8,0*	*97*
255 Z		**2,50** *1520*	**2,20** *1725*	**2,00** *1900*	**1,80** *2110*	**1,70** *2235*									
255 ZV		**1,40** *2715*	**1,30** *2925*	**1,20** *3165*											
440	3,00	**3,70** *770*	**3,00** *950*	**2,50** *1140*	**2,20** *1295*	**1,80** *1585*	**1,60** *1780*					*500*	*550*	*6,6*	*97*
440 Z		**1,25** *2280*													
440 ZV		**1,10** *2590*	**1,00** *2850*	**0,90** *3165*	**0,85** *3355*										
430	2,20	**3,70** *565*	**3,00** *695*	**2,60** *805*	**2,10** *995*	**1,80** *1160*	**1,60** *1305*	**1,25** *1670*	**1,10** *1900*			*500*	*500*	*4,7*	*97*
430 Z		**1,00** *2090*	**0,90** *2320*												
430 ZV		**0,85** *2460*	**0,75** *2785*	**0,70** *2985*	**0,65** *3215*	**0,60** *3485*									
420	1,50	**3,70** *385*	**3,00** *475*	**2,60** *550*	**2,10** *680*	**1,80** *790*	**1,60** *890*	**1,25** *1140*	**1,10** *1295*	**1,00** *1425*	**0,85** *1675*	*500*	*500*	*3,6*	*92*
420 Z		**0,75** *1900*	**0,70** *2035*	**0,65** *2190*											
420 ZV		**0,60** *2375*	**0,55** *2590*	**0,50** *2850*											
620 ZV	1,50	**0,45** *3165*	**0,40** *3565*	**0,35** *4070*								*500*	*550*	*3,7*	*97*
415	1,10	**3,70** *280*	**3,00** *350*	**2,60** *400*	**2,10** *500*	**1,80** *580*	**1,60** *655*	**1,25** *835*	**1,10** *950*	**1,00** *1045*	**0,85** *1230*	*500*	*500*	*2,9*	*87*
		0,75 *1395*													
415 Z		**0,70** *1495*	**0,65** *1610*	**0,60** *1740*	**0,55** *1900*	**0,50** *2090*									
615 Z	1,10	**0,45** *2320*										*500*	*500*	*2,9*	*92*
615 ZV		**0,40** *2615*	**0,35** *2985*	**0,33** *3165*											
610	0,75	**1,70** *420*	**1,40** *510*	**1,15** *620*	**1,05** *680*	**0,85** *840*	**0,75** *950*	**0,65** *1095*	**0,55** *1295*	**0,50** *1425*		*500*	*500*	*2,5*	*92*
610 Z		**0,45** *1585*	**0,40** *1780*	**0,35** *2035*	**0,33** *2160*										
810 ZV	0,75	**0,30** *2375*	**0,27** *2640*	**0,25** *2850*								*500*	*500*	*2,7*	*92*
675	0,55	**1,70** *305*	**1,40** *375*	**1,15** *455*	**1,05** *500*	**0,85** *615*	**0,75** *695*	**0,65** *805*	**0,55** *950*	**0,50** *1045*		*500*	*500*	*1,9*	*87*
675 Z		**0,45** *1160*	**0,40** *1305*	**0,35** *1495*	**0,33** *1585*										
875 Z	0,55	**0,30** *1740*	**0,27** *1935*	**0,25** *2090*								*500*	*500*	*2,2*	*92*
1275 ZV	0,55	**0,23** *2270*	**0,20** *2615*	**0,17** *3075*								*500*	*550*	*2,6*	*97*
805	0,37	**1,30** *270*	**1,10** *320*	**0,90** *390*	**0,80** *440*	**0,65** *540*	**0,55** *640*	**0,50** *705*	**0,45** *780*	**0,40** *880*		*500*	*500*	*1,8*	*87*
805 Z		**0,35** *1005*	**0,32** *1100*	**0,30** *1170*	**0,27** *1300*	**0,25** *1405*									
1205	0,37	**0,70** *500*										*500*	*500*	*2,0*	*92*
1205 Z		**0,23** *1530*	**0,20** *1760*	**0,17** *2070*											

Available standard facewidth's: 500 - 550 - 600 - 650 - 700 - 750 - 800 - 850 - 900 - 950 - 1000 - 1050 - 1100 - 1150 mm
When an electro-mechanical brake is fitted, the minimum facewidth is increased by 100 mm
The total weight of a Drummotor grows approx. 6 kg per 100 mm
Available torque: (Beltpull N x drum diameter m) / 2 Nm

Selection table Dahlander motors

TYPE TM 273.40	Power kW	Beltspeed m/s at 50 Hz Beltpull N								Min. L mm Design A	Min. L mm Design B	Full load curr. 400 V - 50 Hz I = ... A	Weight kg L=600
430/240 **430/240 Z** **430/240 ZV**	**2,20/3,00**	**2,60/5,20** *805/550* **0,90/1,80** *2320/1585* **0,85/1,70** *2460/1675*	**2,10/4,20** *995/680* **0,75/1,50** *2785/1900*	**1,80/3,60** *1160/790* **0,70/1,40** *2985/2035*	**1,60/3,20** *1305/890* **0,65/1,30** *3215/2190*	**1,25/2,50** *1670/1140* **0,60/1,20** *3485/2375*	**1,10/2,20** *1900/1295*			*500*	*550*	*5,0/6,9*	*97*
418/230 **418/230 Z** **418/230 ZV**	**1,30/2,20**	**2,60/5,20** *475/400* **0,75/1,50** *1645/1395* **0,70/1,40** *1765/1495* **0,50/1,00** *2470/2090*	**2,10/4,20** *590/500* **0,65/1,30** *1900/1610*	**1,80/3,60** *685/580* **0,60/1,20** *2060/1740*	**1,60/3,20** *770/655*	**1,25/2,50** *990/835*	**1,10/2,20** *1125/950*	**1,00/2,00** *1235/1045*	**0,85/1,70** *1455/1230*	*500*	*500*	*3,1/4,6*	*97*
816/430 ZV	**1,20/2,20**	**0,45/0,90** *2535/2320*	**0,40/0,80** *2850/2615*	**0,35/0,70** *3255/2985*	**0,33/0,66** *3455/3165*	**0,30/0,60** *3800/3485*				*500*	*550*	*3,8/4,3*	*97*
810/420 **810/420 Z** **810/420 ZV**	**0,75/1,50**	**1,85/3,70** *385* **0,50/1,00** *1425* **0,40/0,80** *1780* **0,30/0,60** *2375*	**1,50/3,00** *475* **0,45/0,90** *1585* **0,35/0,70** *2035* **0,27/0,54** *2640*	**1,30/2,60** *550* **0,33/0,66** *2160* **0,25/0,50** *2850*	**1,05/2,10** *680*	**0,90/1,80** *790*	**0,80/1,60** *890*	**0,65/1,30** *1095*	**0,55/1,10** *1295*	*500*	*550*	*3,3/4,6*	*97*
875/415 **875/415 Z**	**0,55/1,10**	**1,30/2,60** *400* **0,40/0,80** *1305* **0,35/0,70** *1495*	**1,05/2,10** *500* **0,33/0,66** *1585*	**0,90/1,80** *580* **0,30/0,60** *1740*	**0,80/1,60** *655* **0,27/0,54** *1935*	**0,65/1,30** *805* **0,25/0,50** *2090*	**0,55/1,10** *950*	**0,50/1,00** *1045*	**0,45/0,90** *1160*	*500*	*500*	*2,4/2,5*	*92*
805/410 **805/410 Z**	**0,37/0,75**	**1,30/2,60** *275* **0,40/0,80** *890* **0,35/0,70** *1020*	**1,05/2,10** *340* **0,33/0,66** *1080*	**0,90/1,80** *395* **0,30/0,60** *1190*	**0,80/1,60** *445* **0,27/0,54** *1320*	**0,65/1,30** *550* **0,25/0,50** *1425*	**0,55/1,10** *650*	**0,50/1,00** *715*	**0,45/0,90** *790*	*500*	*500*	*1,8/1,5*	*92*

Available standard facewidth's: 500 - 550 - 600 - 650 - 700 - 750 - 800 - 850 - 900 - 950 - 1000 - 1050 - 1100 - 1150 mm
When an electro-mechanical brake is fitted, the minimum facewidth is increased by 100 mm
The total weight of a Drummotor grows approx. 6 kg per 100 mm
Available torque: (Beltpull N x drum diameter m) / 2 Nm

TM 273A40

TM 273A40, mild steel Drummotor with cast iron junctionbox

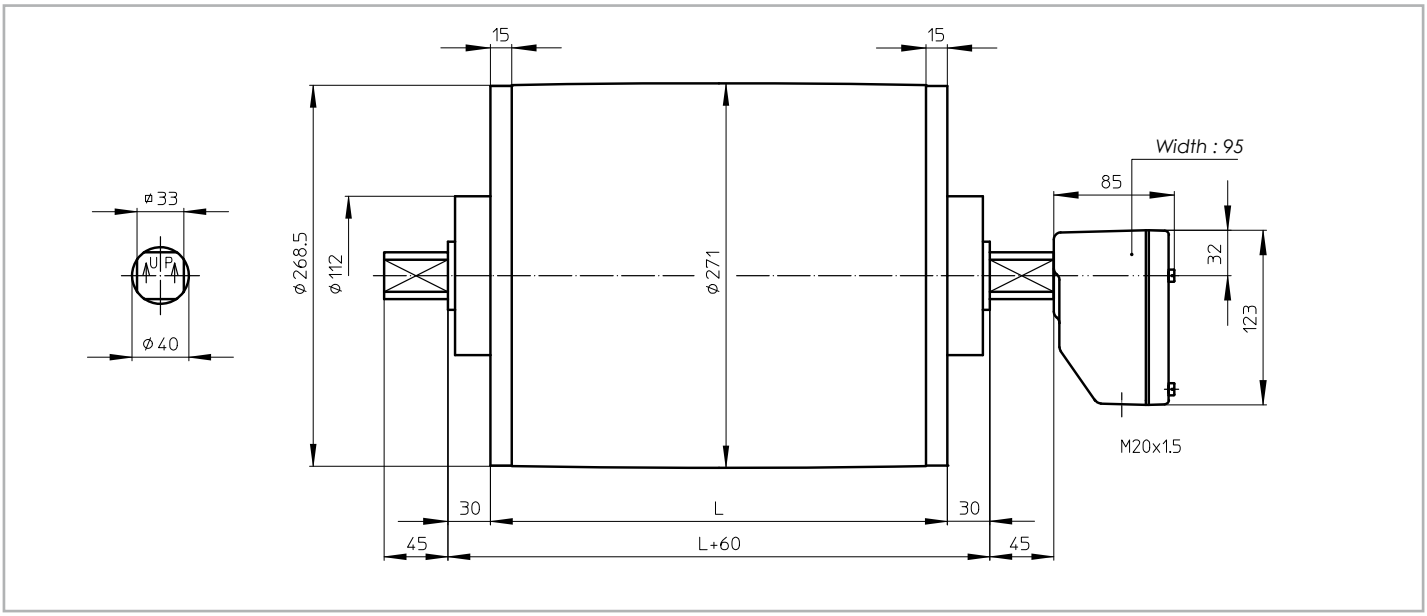

TM 273B40

TM 273B40, mild steel Drummotor with cast iron junctionbox

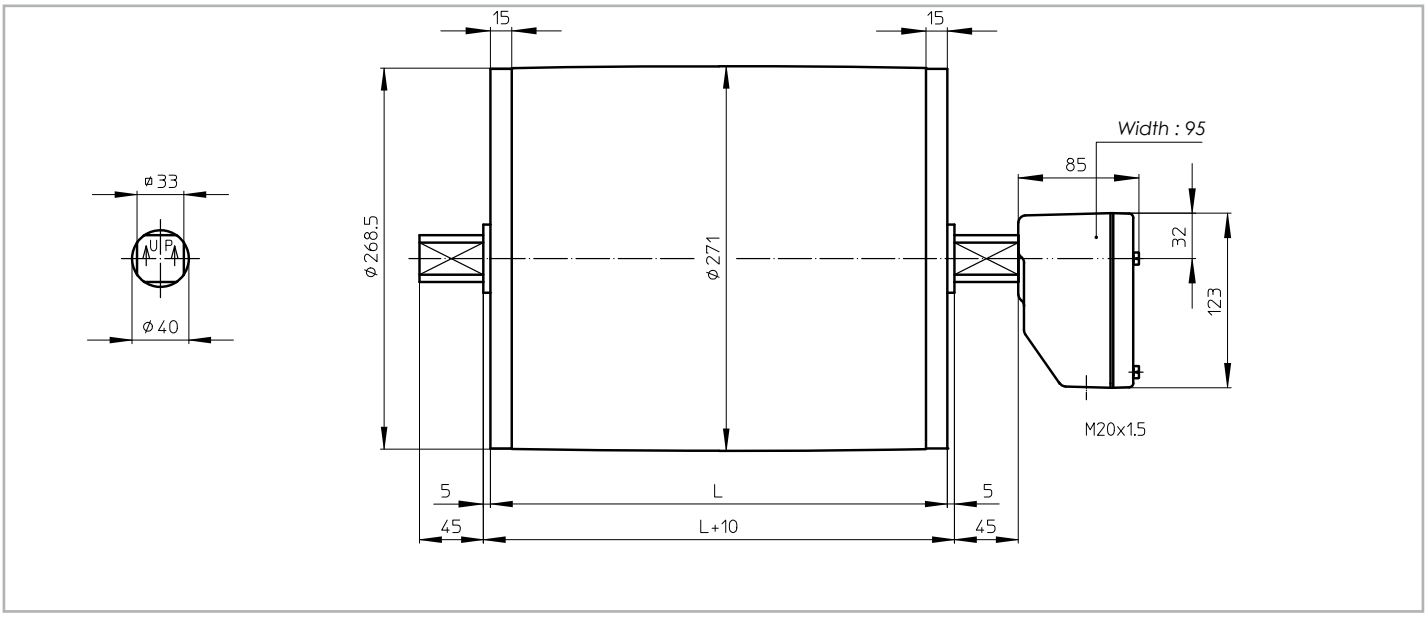

KT 273A40

KT 273A40, mild steel Taildrum

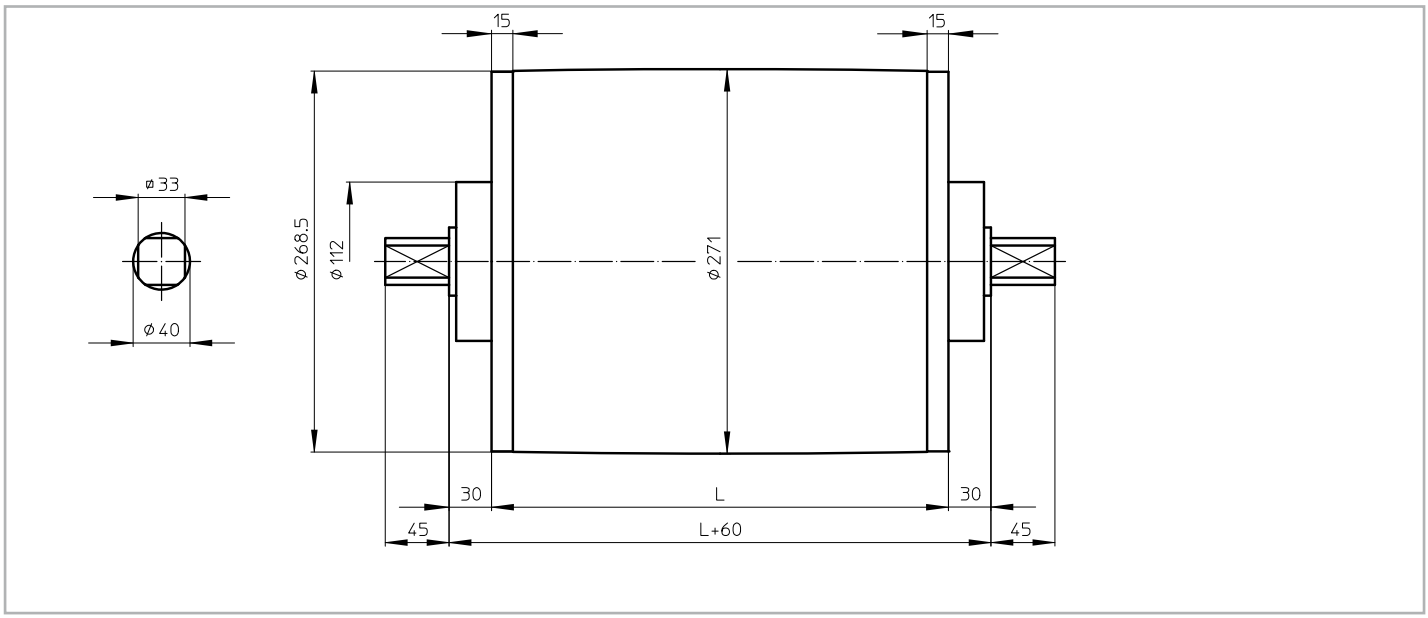

KT 273B40

KT 273B40, mild steel Taildrum

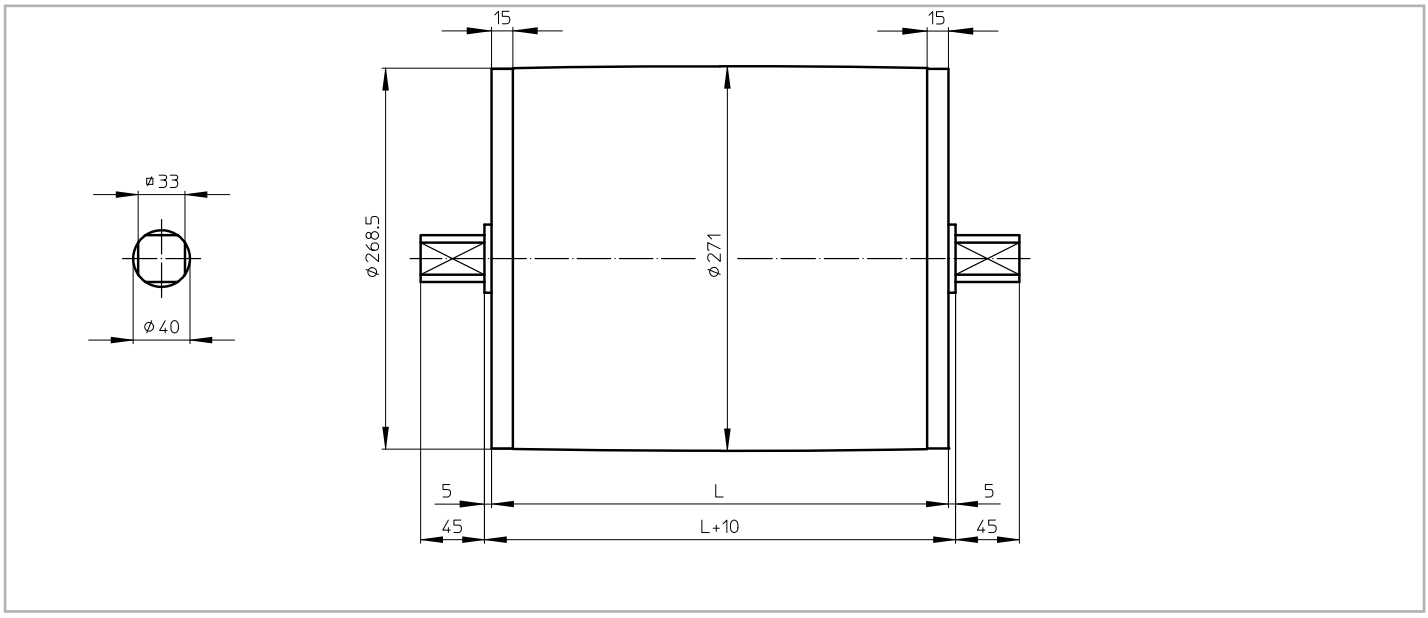

AB 40

AB 40, cast iron or stainless steel bracket
Weight: 4,2 kg per pair

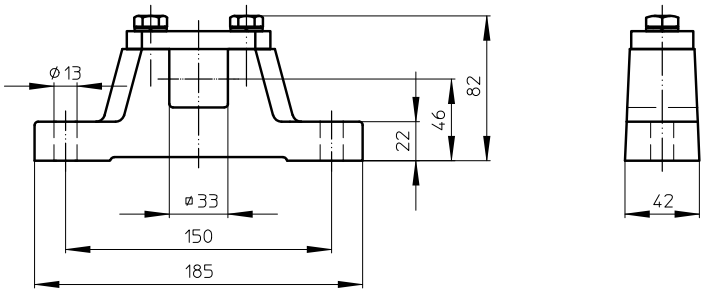

Cable exit

Standard design of a TM 127-25 is with a cast iron junctionbox. For stainless steel design, this can be either a polyamide or stainless steel junctionbox.

On request a Drummotor can be fitted with a cable. In this case it is important to know the available voltage (preferably 1 voltage), the length of the cable, whether the cable is shielded or not and the type of cable exit.

An overview of available cable exits is shown below.

Option 1

Straight cable exit with cable gland

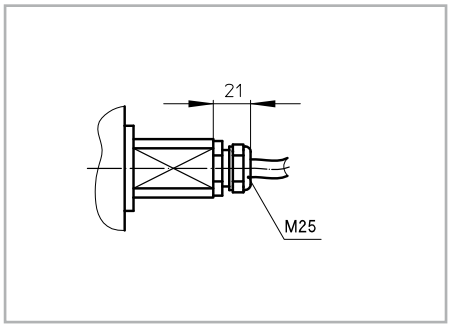

Option 3

Elbow cable exit with cable gland
(minimum facewidth increases with 50 mm)

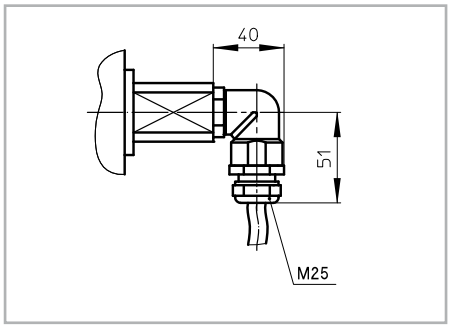

Option 4

Open cable exit (minimum facewidth increases with 50 mm)

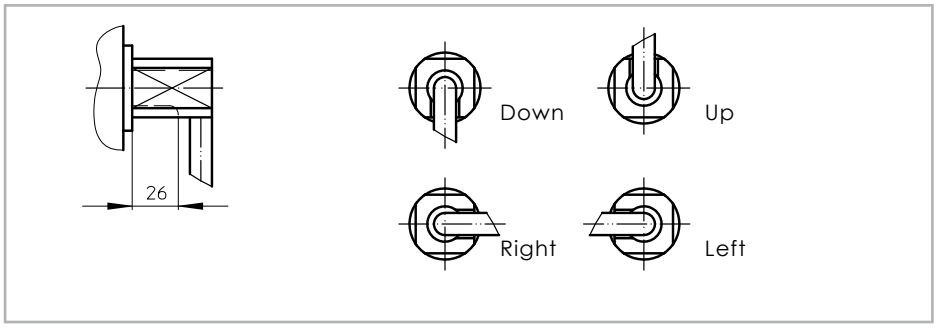

TM 273A40

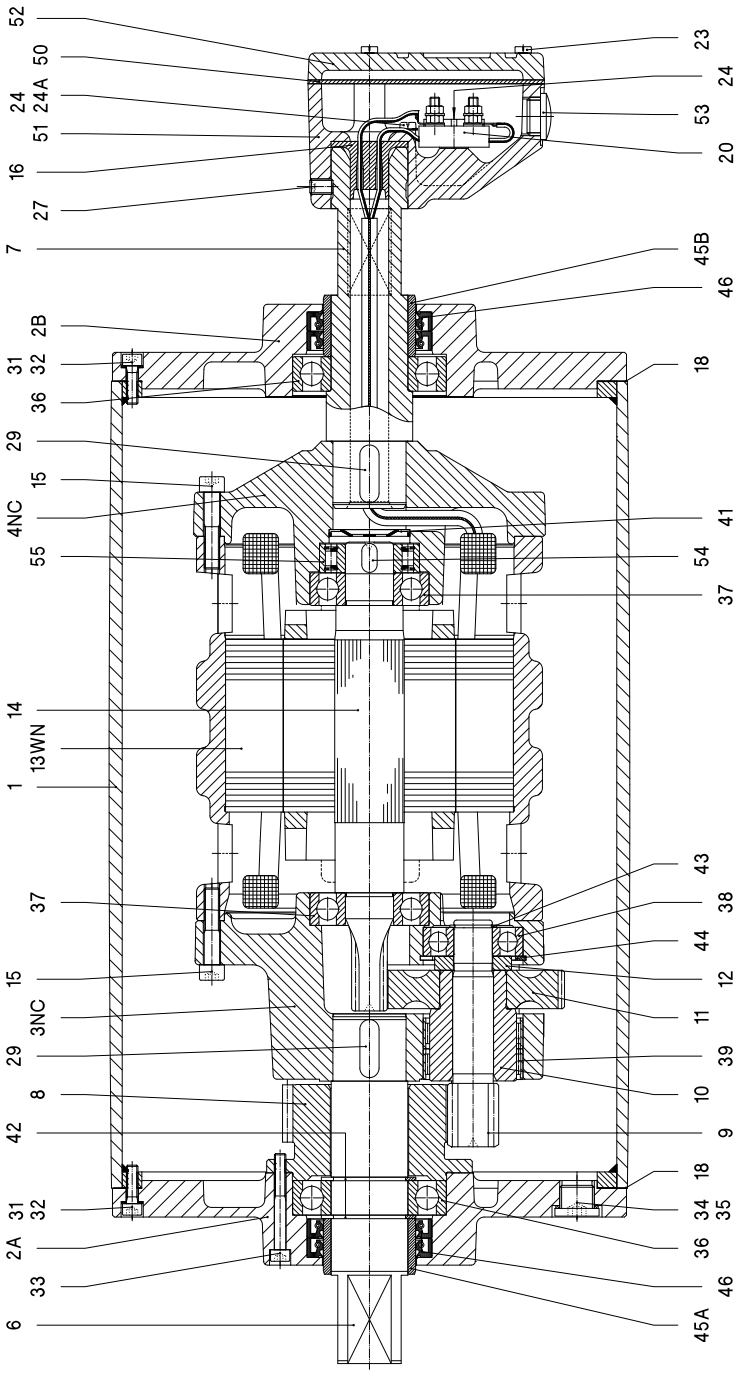

Remark: Drummotor also available in B-design (TM273B40)

Legenda

1	Shell	11	Gear	24	Cyl. head screw	36	Ballbearing	45B	Bearing race
2A	Endflange	12	Distance ring	24A	Toothed lock washer	37	Ballbearing	46	Oilseal
2B	Endflange	13WN	Stator	27	Setscrew	38	Ballbearing	50	Seal
3NC	Gearhousing	14	Rotor	29	Key	39	Needlebearing	51	Junctionbox
4NC	Motorflange	15	Int. hex screw	31	Int. hex screw	41	Disc	52	Junctionbox cover
6	Shaftend	16	Cable passage	32	Washer	42	Circlip	53	Stopping plug
7	Hollow shaft	18	Gasket	33	Int. hex screw	43	Circlip	54	Key
8	External gear	20	Terminalboard	34	Fillerplug	44	Circlip	55	Backstop
9/10	Pinion with bush	23	Cyl. head screw	35	Washer	45A	Bearing race	57	Dataplate

TM 273A40 Z

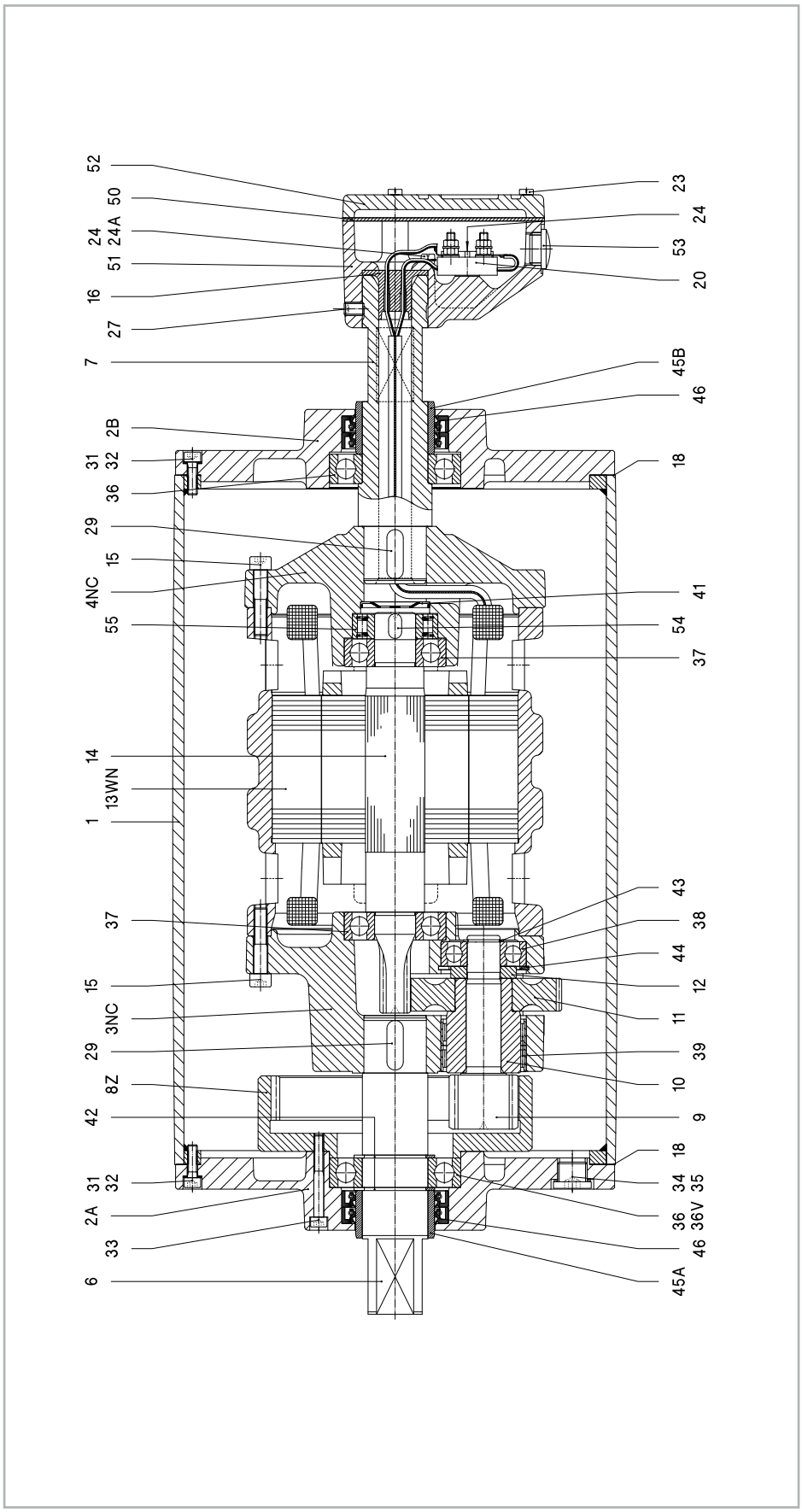

Remark: Drummotor also available in B-design (TM273B40 Z)

Legenda

1	Shell	12	Distance ring	27	Setscrew	38	Ballbearing	51	Junctionbox
2A	Endflange	13WN	Stator	29	Key	39	Needlebearing	52	Junctionbox cover
2B	Endflange	14	Rotor	31	Int. hex screw	41	Disc	53	Stopping plug
3NC	Gearhousing	15	Int. hex screw	32	Washer	42	Circlip	54	Key
4NC	Motorflange	16	Cable passage	33	Int. hex screw	43	Circlip	55	Backstop
6	Shaftend	18	Gasket	34	Fillerplug	44	Circlip	57	Dataplate
7	Hollow shaft	20	Terminalboard	35	Washer	45A	Bearing race		
8Z	Internal gear	23	Cyl. head screw	36	Ballbearing	45B	Bearing race		
9/10	Pinion with bush	24	Cyl. head screw	36V	Cyl. roller bearing	46	Oilseal		
11	Gear	24A	Toothed lock washer	37	Ballbearing	50	Seal		

KT 273A40

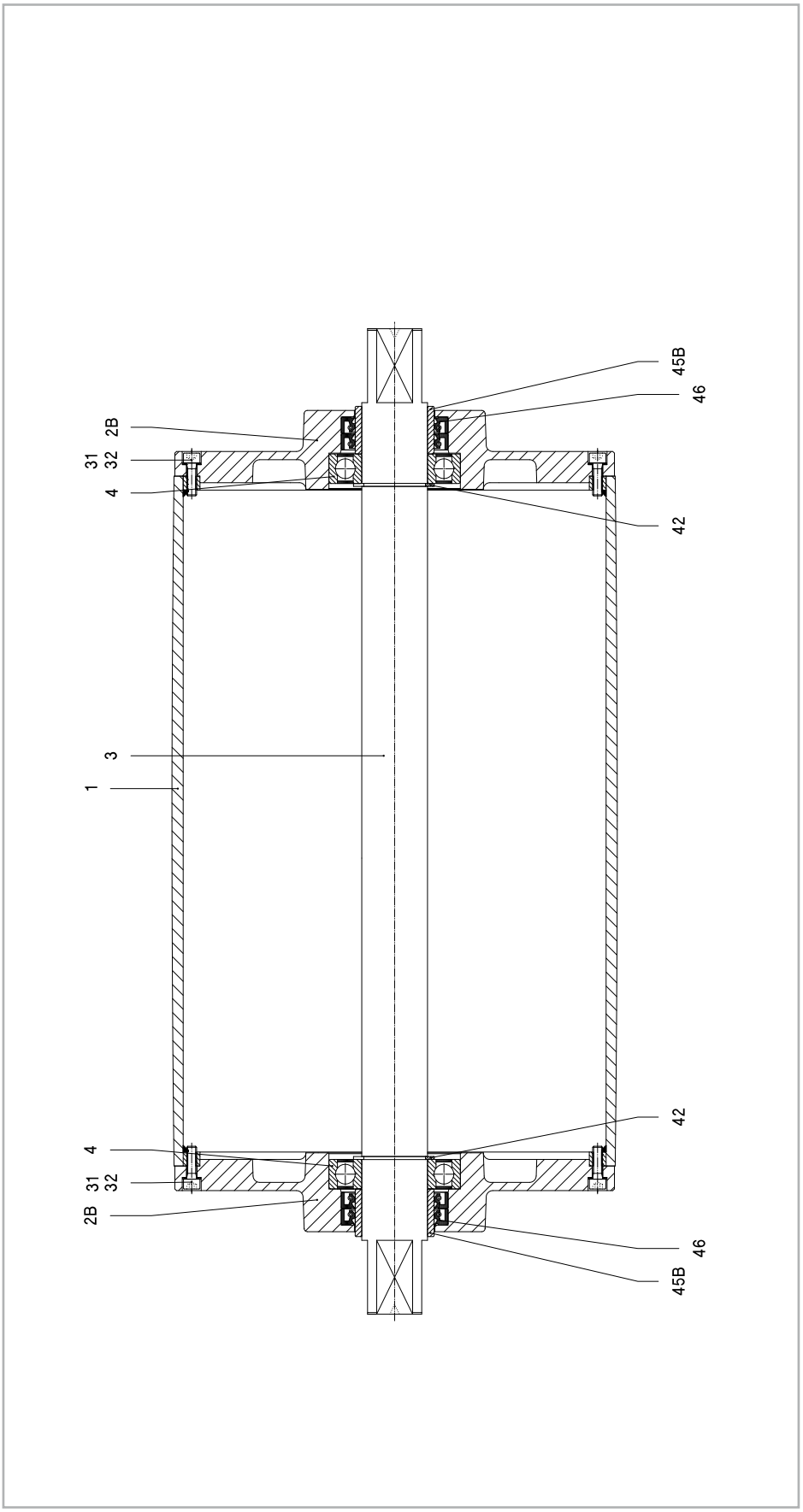

Remark: Taildrum also available in B-design (KT273B40)

Legenda

1	Shell	42	Circlip
2B	Endflange	45B	Bearing race
3	Shaft	45C	Shim plated
4	Ballbearing	45D	Gammaring
31	Int. hex screw	46	Oilseal
32	Washer		

Material

The external parts of the Drummotor are made from mild steel and cast iron. Depending on the application it is also possible to manufacture in stainless steel (complete or part). You can choose between stainless steel 304 (general food industry) and stainless steel 316 (salt water applications).

Backstop - Brake

If an inclined belt conveyor is stopped fully loaded, it could run backwards.

To prevent this we can install a backstop. One of the bearings in the Drummotor is replaced by a one way bearing. The way this bearing is installed determines the direction of rotation of the drum. TBRH indicates a cw rotation and TBLH ccw.

In situations where a Drummotor needs to be able to drive in both directions it is not possible to use a backstop. In this case we use a brake. When an declined belt or a horizontal belt needs to be stopped quickly to pick or place items a brake is the best solution.

Inclined position

Sometimes a Drummotor needs to be installed on an inclined or even vertical position. This is possible, but we need to make adjustments to the oil level in the drum as the oil will flow to the lower side of the Drummotor causing the top bearing to run without lubrication. To prevent problems we will need to know the installation angle so we can fill the drum with extra oil and fit a double sealed bearing on the upper side.

Thermal protection

A Van der Graaf Drummotor can be fitted with thermal protection. This consists of either a thermistor (PTC) or bi-metal (klixon). We install these on each phase of the electric motor.

Encoder - Sensor bearing

In certain applications it is required to measure the speed or position of a conveyor belt. For this type of application we can install an encoder or sensor bearing to accurately measure rotational speed of the Drummotor.

The accuracy needed will determine the type of encoder or sensor used.

Lagging

The power produced by the Drummotor has to be transferred to the belt and lagging is used to give more friction between the Drummotor and the conveyor belt. Van der Graaf can fit your Drummotor with different kinds of lagging.

There is a difference between cold and hot vulcanised lagging. Cold vulcanised means the lagging is glued to the Drummotor usually in sheet form and the join 'welded' together. Hot vulcanising is a process where the shell is wrapped around with thin layers of rubber. The shell with the rubber is then baked in an autoclave fusing the layers together creating a seamless finish.

It is possible to cut grooves (e.g chevron or diamond) in the lagging.

Sprockets

Do you wish to use a Drummotor to drive modular belts? Van der Graaf can help you! Fitting sprockets suitable for various types of modular belts is a simple solution. The Drummotor is manufactured with a cylindrical shell and machined with a patented 'keying' system. The sprockets are simply 'slid' on and locked securely into position.

Sealings for mild steel Drummotors

RBS sealing - IP 66

This sealing is specifically designed for those applications where high water pressure is used for cleaning.

HD sealing - IP 66

This sealing is designed for abrasive applications, like sand, gravel and soil.

Sealings for stainless steel Drummotors

CR sealing - IP 66

This is our standard sealing for stainless steel Drummotors, a very effective, multi labyrinth sealing.

UW sealing - IP 68

This sealing is suitable for under water applications. The maximum depth is approx 2,5 m.

Options

Specification	Standard	Optional
Construction		
Shafts and bolts	Mild steel	Stainless steel
Endflanges	Cast iron	Stainless steel
Shell	Mild steel	Stainless steel
Junctionbox	Cast iron	Polyamide or stainless steel
Cable		Shielded or non-shielded
Sealing mild steel		RBS, HD
Sealing stainless steel	CR	UW
Shell		
Crowned	•	
Cylindrical		•
Balanced		•
Lagging, cold vulcanised		•
Lagging, hot vulcanised		•
Lagging, FDA approved		•
Fitted with grooves, patterns		•
Electro motor		
Three-phase asynchronous	•	
Power supply (P ≤ 3 kW)	230/400 V - 50 Hz	Other voltages and frequencies on request
Power supply (P > 3 kW)	400/690 V - 50 Hz	Other voltages and frequencies on request
Two speed (Dahlander)		•
Twin drive (double power)		•
Insulation class	F	H
Thermal protection		Bi-metal or thermistor
Run by frequency inverter	•	
Other options		
Food grade oil		•
Backstop, mechanical		•
Brake, electro mechanical		•
Clutch brake, electro mechanical		•
Inclined or vertical position		•
Other facewidth's		•
Different shaft designs		•
Encoder or sensor bearing in Drummotor		•
Encoder or sensor bearing in Taildrum		•
Certificates		
CE	•	
UL		•
CSA		•
ATEX zone 22, dust		•

Our products, an overview

Drummotor type	TM 100B25	TM 113B25	TM 127.25	TM 138.25	TM 160.25	TM 160.30	TM 215.30	TM 215.40
Drum diameter (mm)	100	113	127	138	160	160	215	215
Shaft diameter (mm)	25	25	25	25	25	30	30	40
Power (kW)	0.05-0.37	0.04-0.55	0.10-1.1	0.10-1.1	0.10-0.75	0.10-2.2	0.10-2.2	0.37-5.5
Speed (m/s)	0.007-3.60	0.008-4.40	0.008-2.60	0.009-2.80	0.13-3.30	0.06-4.00	0.08-5.30	0.12-4.70

Drummotor type	TM 215B50	TM 273.40	TM 315.40	TM 315.50	TM 400A50	TM 400.60	TM 500A60	TM 500A75
Drum diameter (mm)	215	273	315	315	400	400	500	500
Shaft diameter (mm)	50	40	40	50	50	60	60	75
Power (kW)	1.5-4.0	0.37-5.5	0.37-5.5	1.1-11	1.1-11	1.5-22	1.5-22	11-30
Speed (m/s)	0.18-0.31	0.17-5.00	0.18-5.20	0.16-4.40	0.20-4.80	0.20-4.60	0.25-4.70	0.80-3.20

Drummotor type	TM 620A75	TM 630A100	TM 800A100	TM 800A130				
Drum diameter (mm)	620	630	800	800				
Shaft diameter (mm)	75	100	100	130				
Power (kW)	11-30	22-55	22-55	55-132				
Speed (m/s)	1.00-3.90	1.00-4.00	1.25-5.10	1.60-4.50				

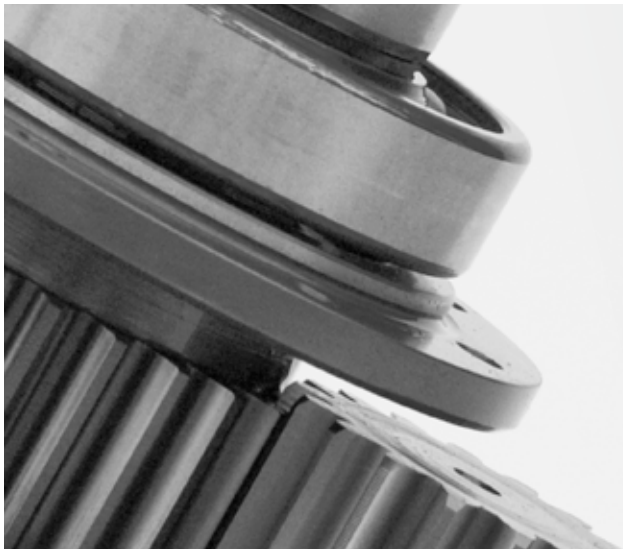

Design benefits

- Robust, industrial design
- Fully enclosed
- Oil filled
- Well-sized gears and bearings

Installation advantages

- Easy to install
- Compact and reliable
- Easy to clean
- Virtually maintenance free
- Low Life Cycle Costs

Notes

Notes

Van der Graaf

Power Transmission Equipment

Contact us

Netherlands
Van der Graaf B.V.
De Weijert 14
P.O. Box 3
8325 ZG Vollenhove
Tel: 00 31 527 241441
Fax: 00 31 527 241488
E-mail: info@vandergraafpte.nl
www.vandergraafpte.nl

Canada
Van der Graaf Inc.
2 Van der Graaf Court
Brampton
Ontario L6T 5R6
Tel: 00 1 905 793 8100
Fax: 00 1 905 793 812
E-mail: info@vandergraaf.com
www.vandergraaf.com

Great Britain
Van der Graaf U.K. Ltd.
Unit 23, The Metro Centre
Welbeck Way Woodston
Peterborough PE2 7UH
Tel: 00 44 1733 391777
Fax: 00 44 1733 391044
E-mail: sales@vandergraaf.co.uk
www.drummotor.com

USA
Van der Graaf Corp.
51515 Celeste
Shelby Township
48315 Michigan
Tel: 00 1 866 595 3292
Fax: 00 1 888 326 0089

Germany
Van der Graaf GmbH
Rheiner Straße 24 B
48432 Rheine-Mesum
Tel: 00 49 5975 306210
Fax: 00 49 5975 3062120
E-mail: info@vandergraaf.de
www.vandergraaf.de

Sweden
Van der Graaf Scandinavia AB
Spinngatan 2
267 73 Billesholm
Tel: 00 46 42 22 0802
Fax: 00 46 42 22 0803
E-mail: info@vandergraaf.se
www.vandergraaf.se

Finland
Van der Graaf Scandinavia AB
Tel: 00 358 400 419063
E-mail: info@vandergraaf.fi
www.vandergraaf.fi

BRUYNOOGHE
transportbanden

Bruynooghe nv
Hillemolenstraat 1
B-8830 Hooglede
+32 (0) 51 70 35 35

info@bruynooghe-nv.be

www.bruynooghe-nv.be